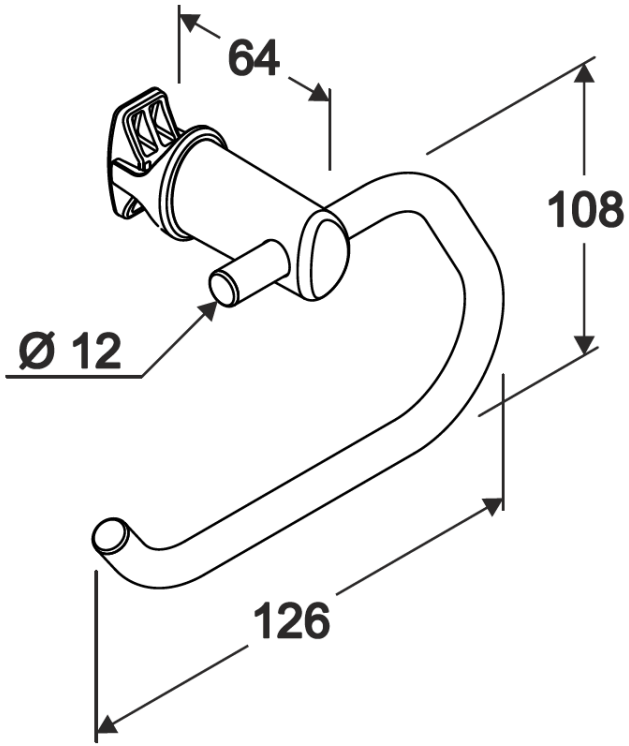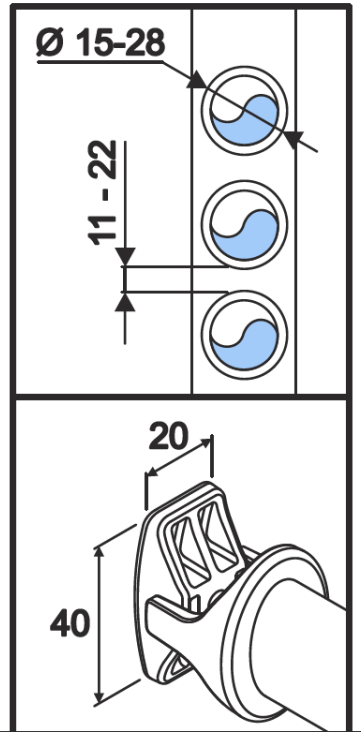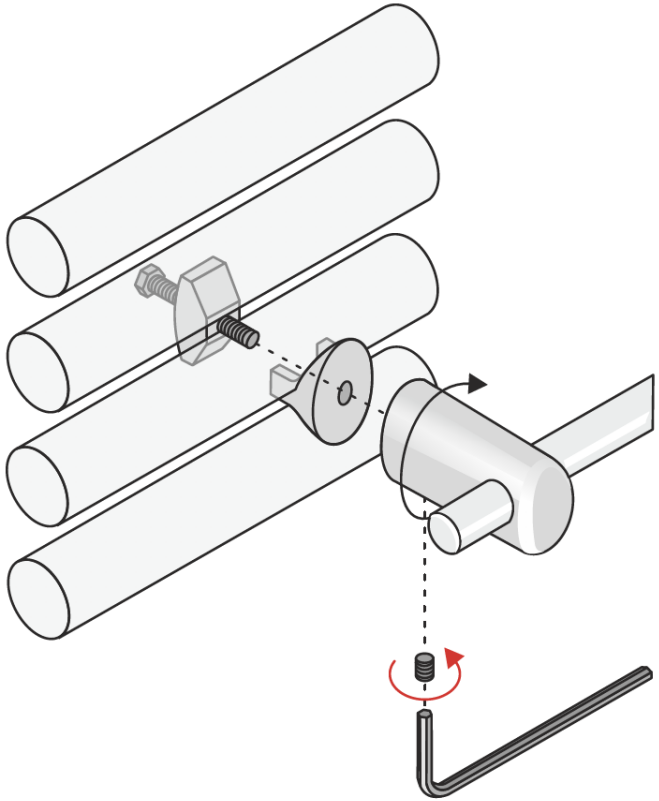Handy Pap